MicroCART (sdmay18-17)

MicroCART: Microprocessor-Controlled Aerial Robotics Team

Meet the Team

Team Members: Kyle Trost, Tyler Imboden, Peter Thedens, Jakub Hladik, Dane Larson, Matthew Kelly, Austin Rohlfing, Blake Pries

Clients and Advisors: Dr. Phillip Jones, Dr. Nicola Elia

Website: http://sdmay18-17.sd.ece.iastate.edu/

Problem Statement

- Controls research platform
  - Modular
  - Robust
  - Low-Latency
- Focus on infrastructure
  - Controls is one small portion of project
- Common real-world application

Keywords and Definitions

- Quad/Quadcopter
  - Quadrotor helicopter
- FPGA
  - Field-programmable gate array
- Ground station
  - Application running on a host computer
  - Communicates over Wi-Fi to quad and camera tracking system
- PID and LQR controllers
  - Proportional–integral–derivative
  - Linear-quadratic regulator
- Camera System
  - 12 camera IR tracking system

Primary Areas of Development

- Quadcopter Platform
- Ground Station
- Controls
- Testing and Simulation

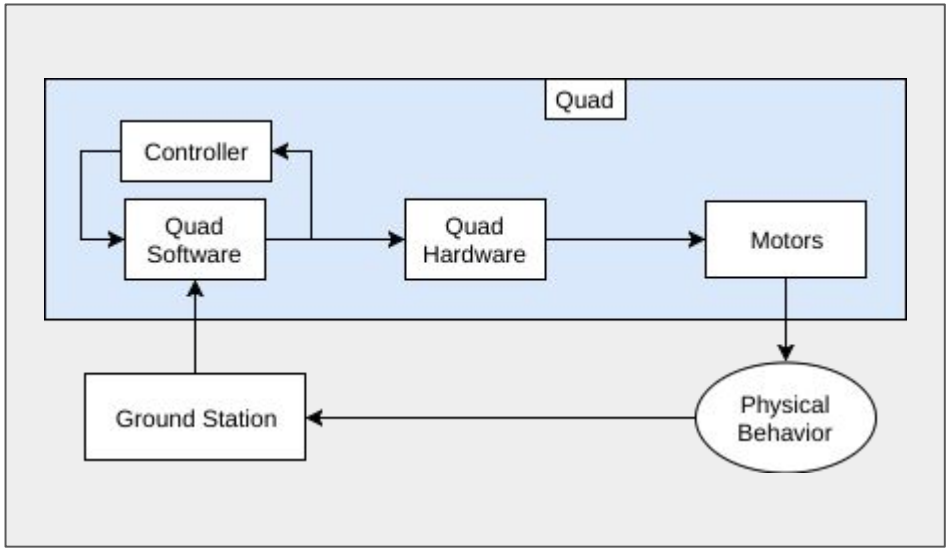

Functional Requirements

- Quad Platform
  - Ground station communication
  - Extract sensor data from sensors
  - Arbitrate which control graph to use
- Ground Station
  - Multiple quad support
  - Support of demos
  - Option for AP and Client on ground station PC
- Controls
  - Enable autonomous flight with controls model
- Testing and Simulation
  - Automated test suite
  - Sanity check of the quadcopter software through simulation

Non-Functional Requirements

- Documentation
  - Working with a continued repository
  - Document new and existing progress
- Performance
- Testing

Technical Constraints and Considerations

- Camera tracking system
  - Screened area boundaries
  - Decreasing accuracy when approaching boundaries
- Battery endurance
  - 10-15 minute flight time
- WiFi Latency

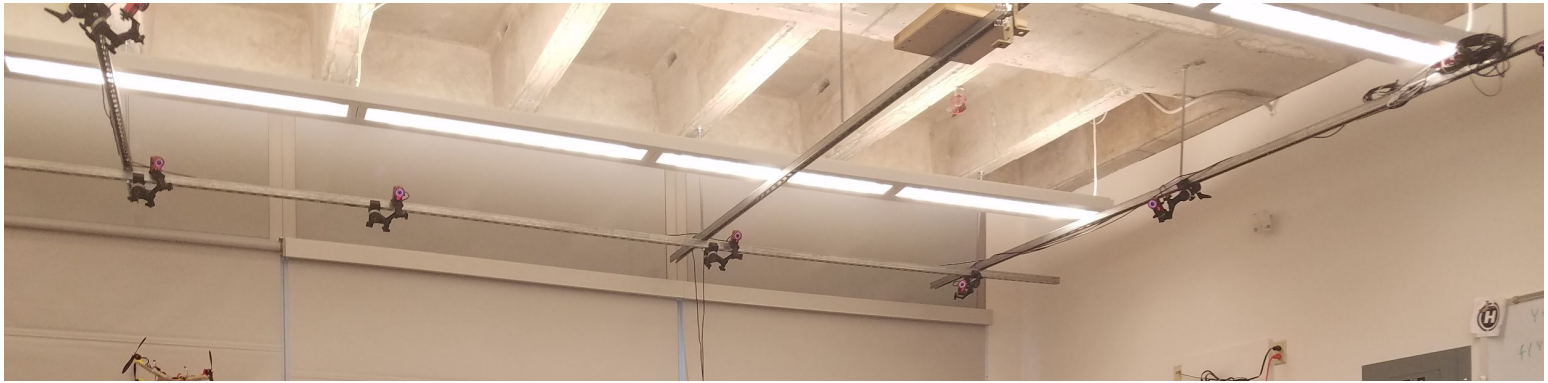

Potential Risks & Mitigation

- Safety hazards
  - Spinning rotors
  - Potentially unstable quad
  - LiPo battery charging
- Risk to Quadcopter
  - Testing controls can cause unknown behavior
  - Loss of position information
- Precautions
  - Quadcopter tether
  - Simulation testing
  - Camera safe zones
  - Battery bags
  - No unattended batteries

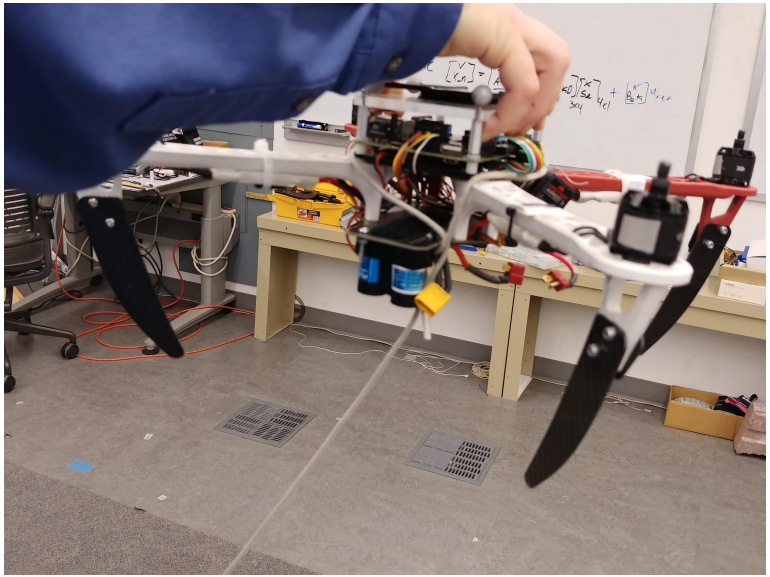

Market Survey

- Georgia Tech: DURIP, others
  - Remote-access testing
- University of Maryland: TERP
  - LQR controller
  - MATLAB implementation
- Stanford: STARMAC
  - Basic controls
  - Research focused on collision avoidance
- M.I.T.: RAVEN
  - Multiple vehicle types
- Iowa State: MicroCART
  - Modular controls implementation

Stanford STARMAC platform
from: http://ai.stanford.edu/~gabeh/research.html

Project Deliverables

- Improving existing system
  - Documentation
  - Upgrade testing framework
  - Second Quad
  - Vivado
- New features added
  - Multi-vehicle navigation
  - Manual “assisted” mode
  - LQR controller
  - Additional demos
  - Flight simulation

Hardware and Software Platform

- Quad hardware
  - FPGA
- Quad software and controls
  - Wi-Fi
  - PID or LQR controller
- Ground station
  - Linux workstation
  - Camera system
- Testing
  - Continuous integration server
  - Quadcopter simulator

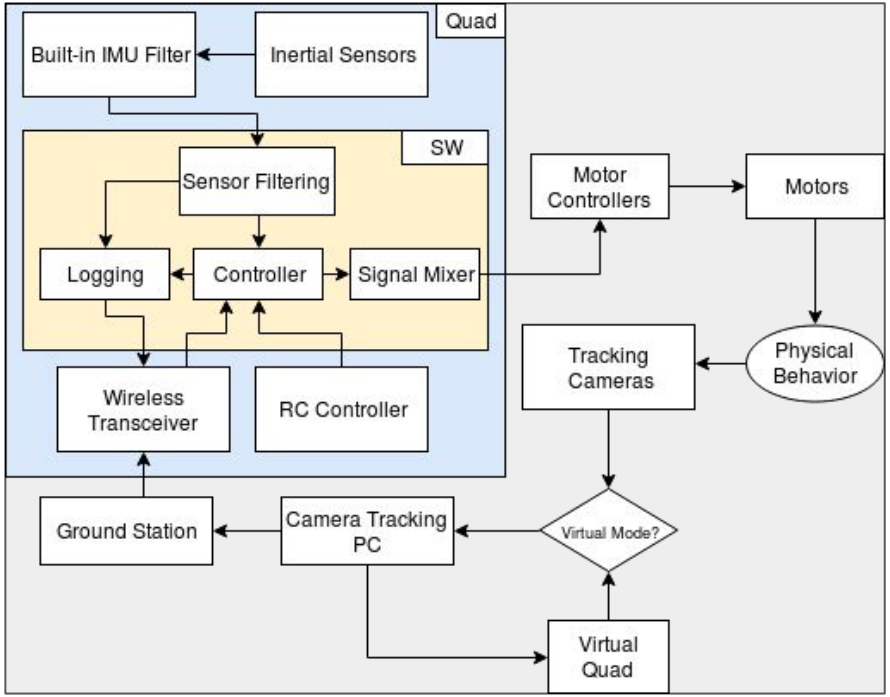

Functional Decomposition

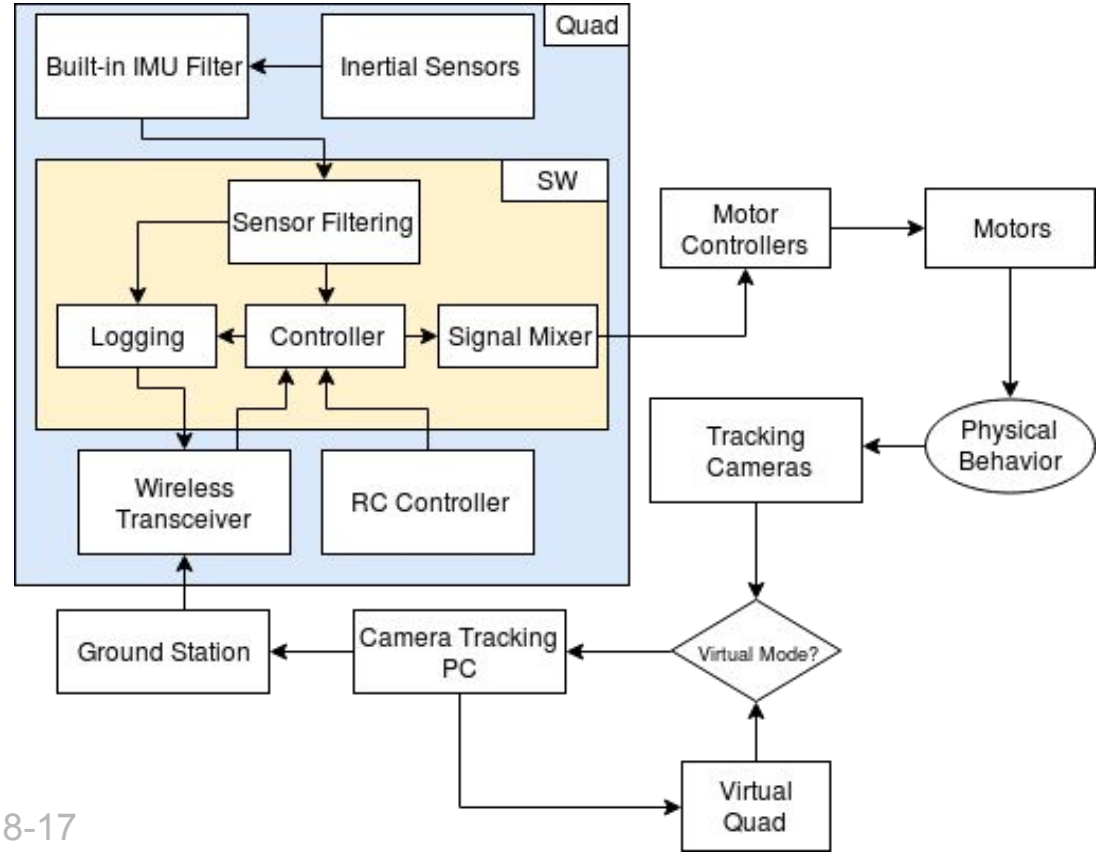

Design and Implementation

2nd Quad

- Challenges:
  - Accelerometer biasing/placement
  - Radio controller settings
  - ESCs/DJI Documentation
- New Versions of Components
  - Lidar Lite 2 vs Lidar Lite 3
  - Controller / Radio Receiver
- Improvements over 1st Quad
  - Wiring
  - Component Mounting

Resource/Cost Estimate

Part	Cost
Frame & Speed Controllers	$270
Zybo Board	$189
Lidar Sensor	$134
Optical Flow Sensor	$120
Radio Receiver	$40
Remote Controller	$110
Batteries	$35

Vivado Upgrade

- Major Strides Upgrade from XPS to Vivado
  - More stable
  - Newer software
  - Faster FPGA hardware development
- Ran into many compatibility issues
- Results
  - Was flying, but unstable
  - Now building but failing in runtime
  - Findings well documented
  - Good base for future members

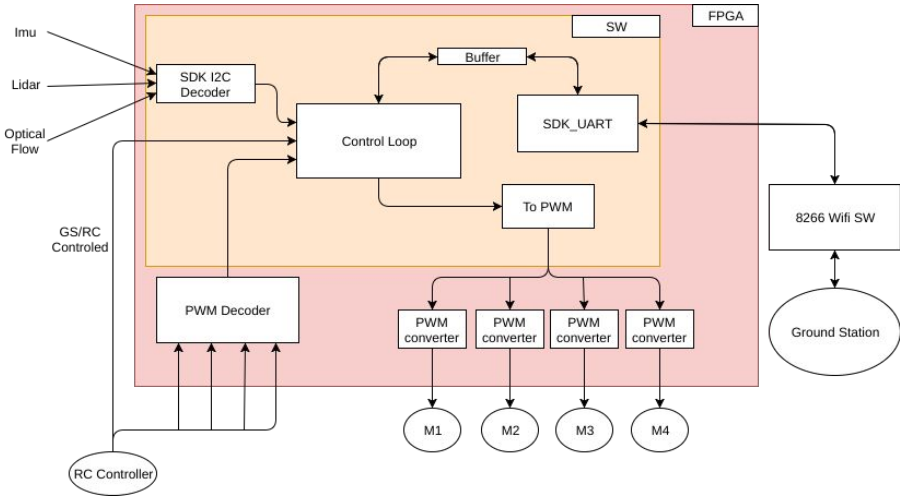

Ground Station

- Added multiple vehicle support
  - Quads, Crazyflies, and Roombas
- Ground Station access point
- Additional features to GUI
- Manual “assisted” mode
  - User input with a controller to modify PID setpoints

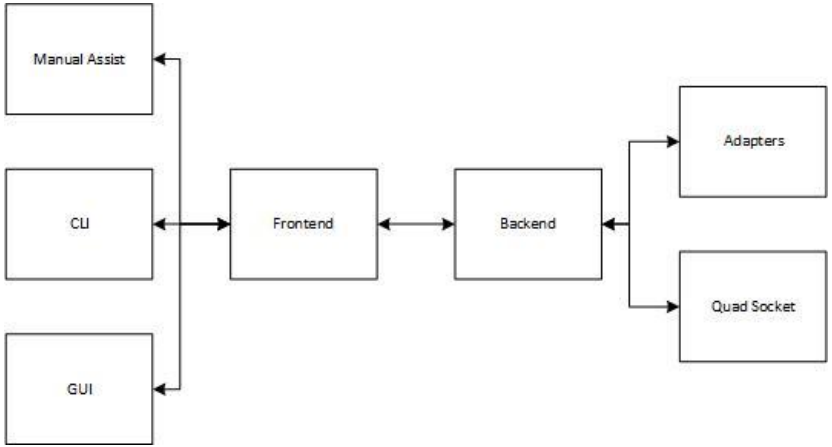

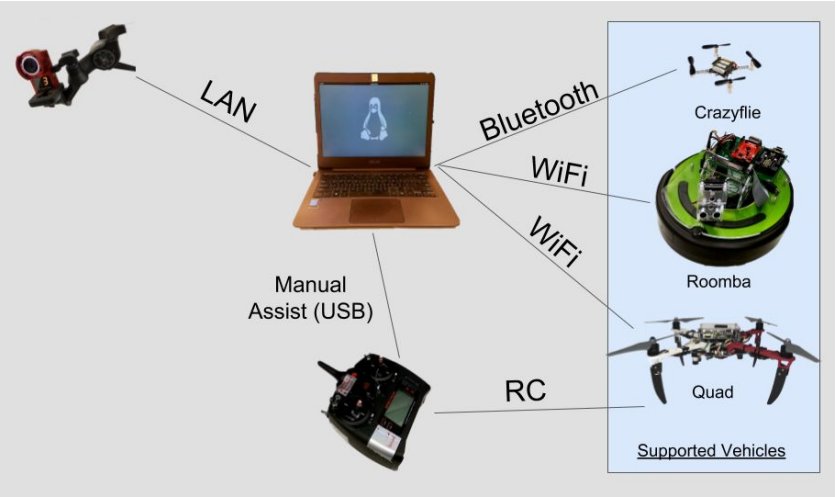

User Interface (Ground Station GUI)

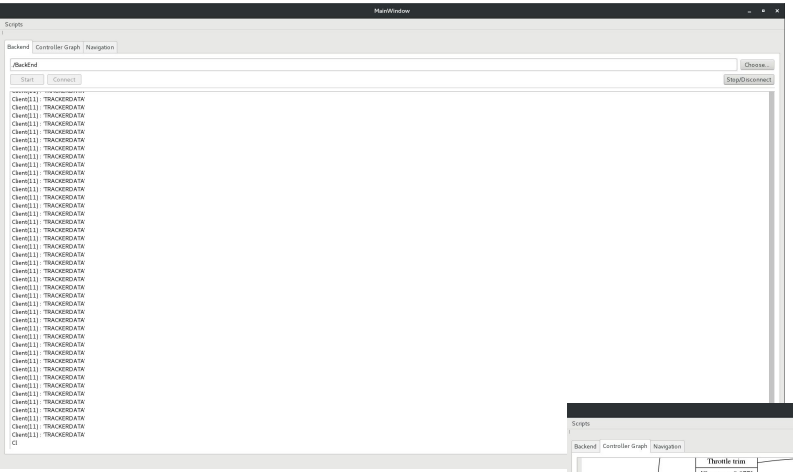

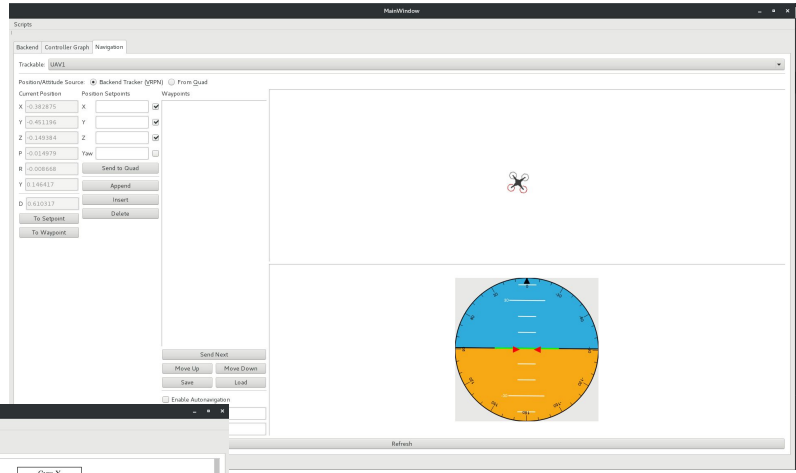

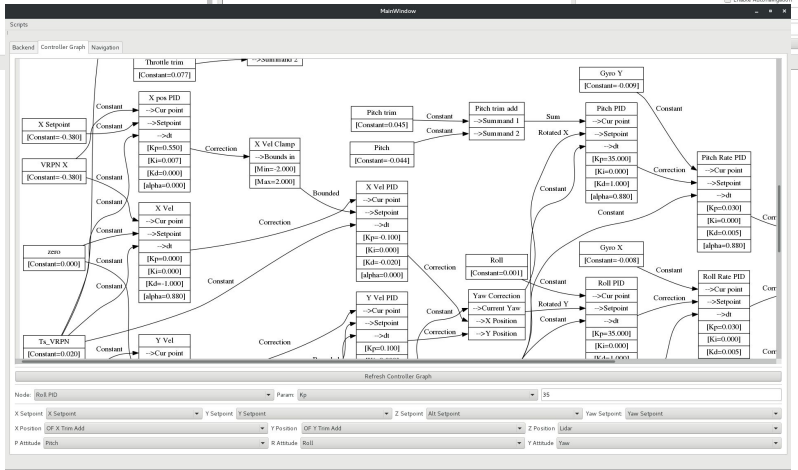

Detailed Design of Controls

- LQR Controller Design
  - Generic system linearization
  - Testing with existing Simulink model
  - Porting to quad-side C
- Weight Selection
  - Multiple weighting patterns
  - Constrained minimization with MATLAB
- Design based on past research [1]
- Goal: implement fundamentals for future
  - State-feedback control for quad

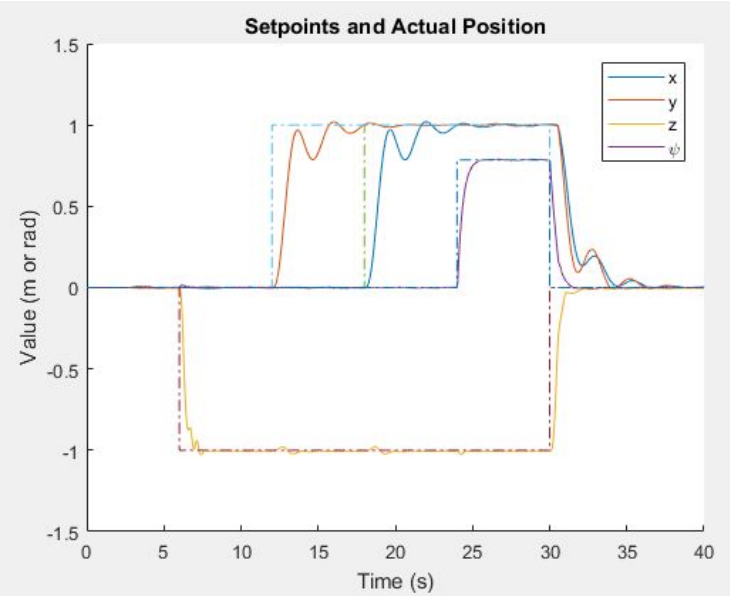

Diagonally-weighted LQR setpoint tracking

Quad Simulator

- Uses JSBSim
- Visualization through FlightGear
- Data logging and data input over sockets
    - Plug-and-play control algorithm over sockets
- Joystick integration with real-time simulation
- Automated testing through scenario scripting and event detection

Test Plan

- Software
  - Unit and integration tests
  - Upgrade testing framework [5]
- Controls algorithm
  - Simulink
- System
  - Flight simulation
  - Flight tests

```
make -C src/computation_graph test
make[1]: Entering directory '/builds/danc/MicroCART/quad/src/computation_graph'
gcc -g -o run_tests test/test_computation_graph.c obj/computation_graph.o -I../../inc -L../../lib -lunity -lm -lgraph_blocks -DUNITY_INCLUDE_CONF
IG_H
./run_tests
test/test_computation_graph.c:244:test_adding_2_numbers:PASS
```

Value Added

- Improving existing system
  - Documentation
  - Upgrade testing framework
  - Second Quad
  - Vivado
- Adding new features
  - Multi-vehicle navigation
  - Manual “assisted” mode
  - Flight simulation
  - LQR controller
  - Additional demos

Future Work

- Communication between Quads
- Linux Running on second core (OpenCV?)
- Strong real-time logging framework that is configurable for use in research
- More complete usage of testing framework
- Integrate flight simulation into continuous integration

Questions

References

[1] M. Rich, “Model Development, system identification, and control of a quadrotor helicopter” in *Iowa State University Digital Repository*, 2012

[2] Wehr, David. “ESP8266 WiFi Latency Testing.” 17 Sept. 2016, https://docs.google.com/document/d/1VU99wMgkqK2EgbNLdqrdhvj9iikfqk2gtUYQ367K5-Q/edit#heading=h.s00g8emj18jx

[3] Plattner, Hasso. “An Introduction to Design Thinking PROCESS GUIDE.” in *Institute of Design at Stanford* https://dschool-old.stanford.edu/sandbox/groups/designresources/wiki/36873/attachments/74b3d/ModeGuideBOOTCAMP2010L.pdf

[4] I. McInerney, “Development of a multi-agent quadrotor research platform with distributed computational capabilities” in *Iowa State University Digital Repository*, 2017

[5] Throw The Switch. “Unity.” http://www.throwtheswitch.org/unity

Backup Slides

Ground Station

Latency Tests

- Sends 10,000 Packets
- TX and RX tied on the ESP Chip
- When running with multiple Clients tests were run on multiple processes
- AP is the old configuration

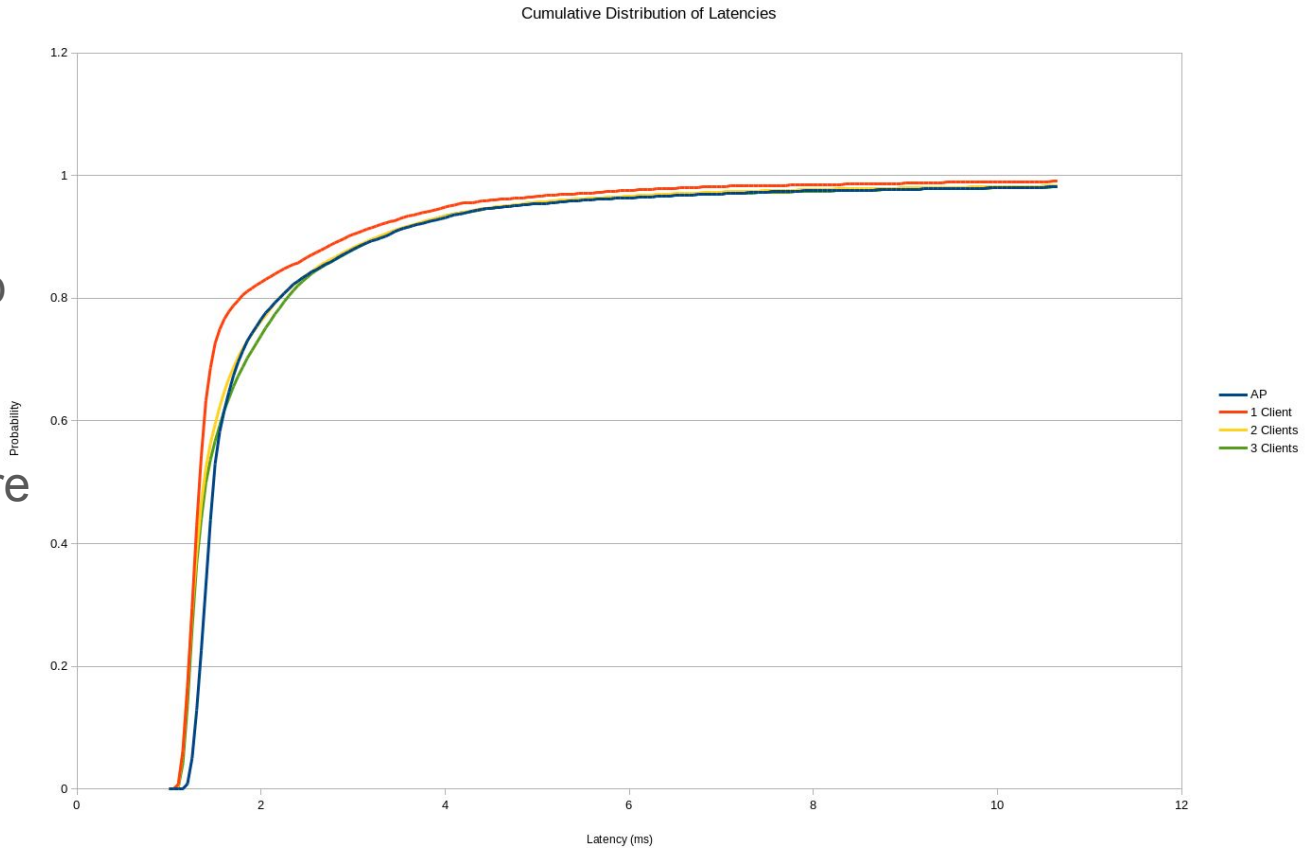

Controls Media

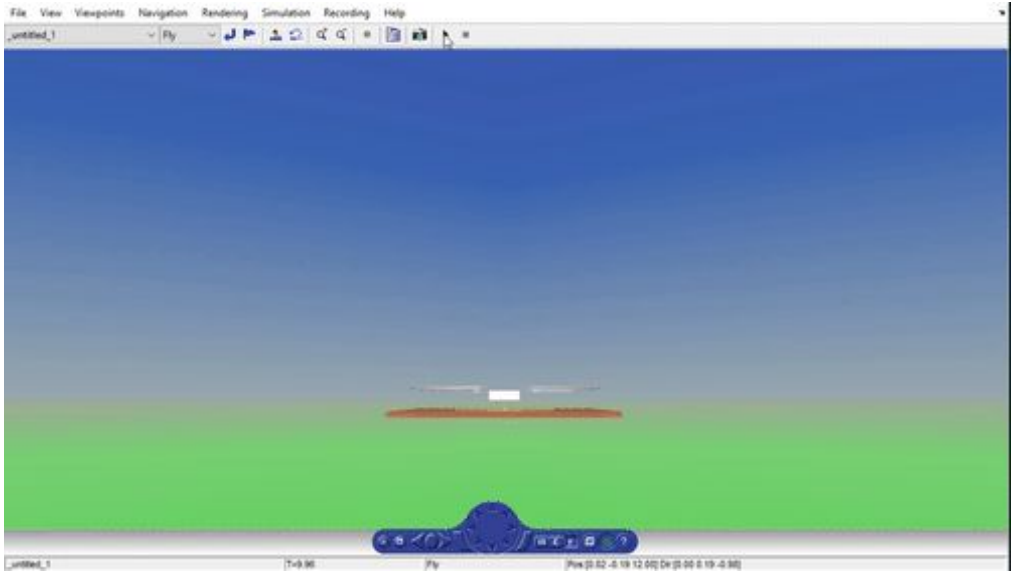

PID

Modification of Control Graph Implementation